ORTEC®

AMETEK

GEM Series Coaxial HPGe Detector Product Configuration Guide

P-type Coaxial HPGe Detectors for High Performance Gamma Spectroscopy in the Energy Range of ~40 keV and Up.

The majority of gamma spectroscopy applications such as those found in counting laboratories involve the energy range ~40 keV upward. ORTEC GEM detectors are designed to cover this energy range.

All GEM Series feature:

- Efficiencies to 150%, higher on request.
- Excellent energy resolution and peak symmetry.
- SMART bias options.
- Harsh Environment (-HE) option.
- Low-background carbon fiber endcap options.
- PLUS preamplifier option for ultra-high-rate applications.
- Huge configuration flexibility: PopTop, Streamline and mechanically cooled options.

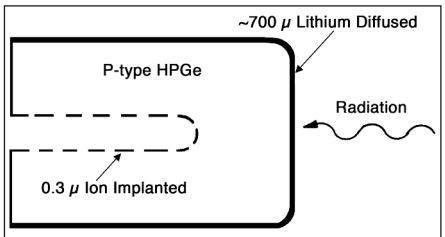

Fig. 1. Configuration of GEM Coaxial Germanium Crystal.

ORTEC offers GEM Series HPGe detectors with relative efficiencies[1] from 10% to 150% and beyond. The detectors are manufactured from ORTEC-grown germanium crystals processed in our advanced manufacturing facility in Oak Ridge, TN. The detectors are fabricated from P-type germanium with an outer contact of diffused Li and an inner contact of ion-implanted boron.

ORTEC maintains a stocklist of GEM detectors. Some of these have "super specifications," that is, a warranted energy resolution better than the usual GEM warranted specifications.

The Following Specifications are Provided for each GEM Detector

- Energy resolution full-width half-maximum (FWHM) at 1.33-MeV and optimum shaping time.
- Relative Photopeak efficiency at 1.33 MeV.
- Peak-to-Compton ratio at 1.33 MeV.
- Peak shape ratio for the full-width tenth-maximum to the full-width half-maximum at 1.33 MeV.
- Energy resolution at 122 keV at optimum shaping time.

Configuration Guidelines

PopTop or Streamline (non-PopTop) Configuration

The essence of a PopTop detector system is that the HPGe detector element cryostat, preamplifier, and high voltage filter are housed in a detector “capsule” which is then attached to an appropriate cryostat (Figure 2.)

In Streamline systems, the detector capsule is NOT demountable. Detector capsule and cryostat share the same vacuum. In configuration terms, this requires a cryostat or cryostat/dewar selection with the cryostat having a matching diameter to the capsule endcap or an integrated cryocooling system (ICS). A cryostat or ICS must always be ordered with a Streamline capsule, because they are integral.

The actual PopTop capsule has its own vacuum. It can be mounted on any of the available cryostats, cryostat/dewar combinations, or ICS-P4 mechanical cooling system.

Certain cryostat configurations are available only as PopTop and others are available only as Streamline.

[1]By convention, HPGe detectors are characterized by “relative efficiency”. Relative efficiency is defined as the efficiency of a point Co-60 source at 25 cm from the face of a standard 3-inch x 3-inch right circular cylinder NaI(Tl) detector. “IEEE Test Procedures for Germanium Detectors for Ionizing Radiation,” ANSI/IEEE Standard 325-1986.

Steps to Configure Your ORTEC HPGe Detector

1) Configure the Detector Model

- Capsule type (PopTop or Streamline)
- Ge Crystal efficiency and specifications
- Endcap and window
- Mount
- Preamplifier
- High Voltage Filter
- Cable Package
- Integrated Cryocooling System (ICS)

Options are available for the detector model that can change specific materials used in the construction of the detector endcap, cup, and mount. Preamplifier options are also available.

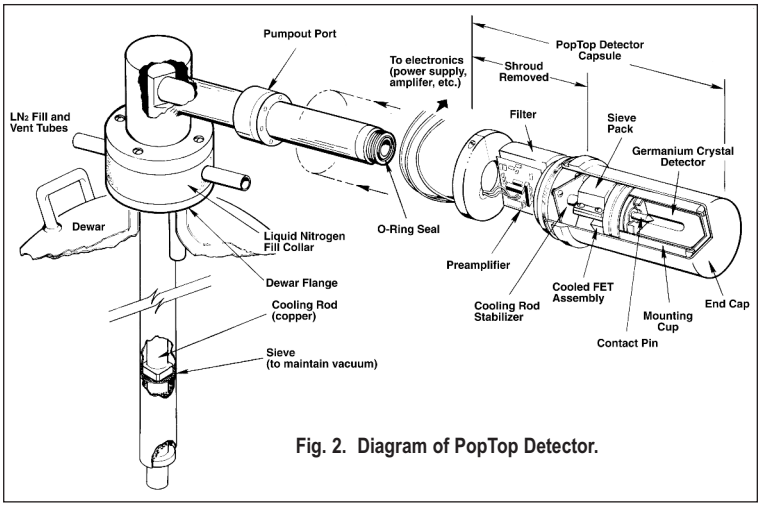

Fig. 2. Diagram of PopTop Detector.

2) Configure the Cryostat/Dewar or ICS Model

- Vertical Dipstick style (separate Dewar or Mobius Recycler)
- Horizontal Dipstick style (separate Dewar or Mobius Recycler)
- Portable with all-position or multi-position cryostat/dewar models
- Downlooking designed to be oriented with the detector pointing down
- Sidelooking designed to be oriented with the detector horizontal at the bottom of the dewar
- "J" configurations designed with the detector attached near the bottom of the dewar and a right angle bend in the cryostat orienting the detector to look up.

A cryostat and dewar or other cooling device are required for operation.

If a PopTop detector has been selected, you can choose a PopTop style cryostat, cryostat/dewar combination or ICS-P4 mechanical cooling systems.

If a Streamline detector has been selected, you must choose a cryostat or cryostat/dewar model for the detector to be mounted on and vacuum sealed or an ICS. The cryostat, cryostat/dewar combination or ICS diameter must match the endcap diameter of the selected detector.

Detector Options

Integrated Cryocooling System Option (-ICS, -ICS-E)

The Integrated Cryocooling System (ICS) cryostat is sealed with a cryocooler and is immune to thermal short cycling. Unlike the typical three day loss of use of the detector with a standard type cryostat, the ICS can be re-cooled immediately, minimizing any time lost for temporary warm up. The ICS is available with an internal preamplifier (-ICS) or an external preamplifier (-ICS-E).

Fig. 3. ICS Integrated Cryocooling System.

Integrated Cryocooling Low-Background System (-ICS-LB)

Low-background detector with internal preamplifier, high purity aluminum endcap, high purity aluminum window, high purity aluminum internal cup, and low-background Cu mount for the ICS Integrated Cryocooling System. The lower background material allows for lower Minimum Detectable Activity (MDA) for a specific counting time, which provides another step in increasing sample throughput in low-background applications.

SMART-1 Option (-SMP)

The SMART-1 option monitors and reports on vital system functions, and can save authentication codes and report the code at a later time. It has the high voltage included, so none of the instruments require an external high-voltage power supply.

The SMART-1 is housed in a rugged ABS molded plastic enclosure and is permanently attached to the detector endcap via a molded-strain-relieved sealed cable. This eliminates the possibility that the detector will suffer severe damage from moisture leaking into high-voltage connectors. The SMART-1 can be positioned in any convenient place and does not interfere with shielding or other mounting hardware.

Fig. 4. SMART-1 Detector Interface Module.

Ultra-High Count-Rate Preamplifier Option (-PL)

The Ultra-High Count-Rate Preamplifier (transistor-reset preamplifier), can handle input count rates up to 1,000,000 counts/s at 1 MeV, offers the added benefit of having no feedback resistor.

Harsh Environment Option (-HE)

The Harsh Environment option is a rugged carbon fiber endcap with a sealed electronics housing featuring a replaceable desiccant pack which ensures that the electronics stay 100% dry and indicates when it needs to be replaced.

GEM series detectors in PopTop capsules of 76 mm diameter or larger can be supplied with this option.

Fig. 5. -HE Detector Option (Carbon Fiber Endcap).

Remote Preamplifier Option (-HJ)

This option allows all the preamplifier and high voltage connections to be outside a shield and removes the preamplifier and high voltage filter from the "line-of-sight" to the Ge crystal. For low background applications, this option eliminates any possible preamplifier or high voltage filter components that may add to the background inside a shield.

Low-Background Carbon Fiber Endcap Options (-RB, -LB-C, and -XLB-C)

Carbon Fiber is as strong as Al, Mg, and Cu, creates less background, does not corrode, and can detect energies less than 10 keV.

This lower background material allows for lower Minimum Detectable Activity (MDA) for a specific counting time, which provides another step in increasing sample throughput in low-background counting applications. The lower Z of Carbon Fiber provides a low-energy window without the additional background found in most alloys. See Figures 6 and 7 for transmission characteristics of the Be and carbon fiber windows.

Carbon Fiber, unlike Beryllium, is non-toxic and can be cleaned with most laboratory solvents such as methanol, trichloroethylene, and acetone. Soap and water may also be used. Abrasive cleaners should not be used.

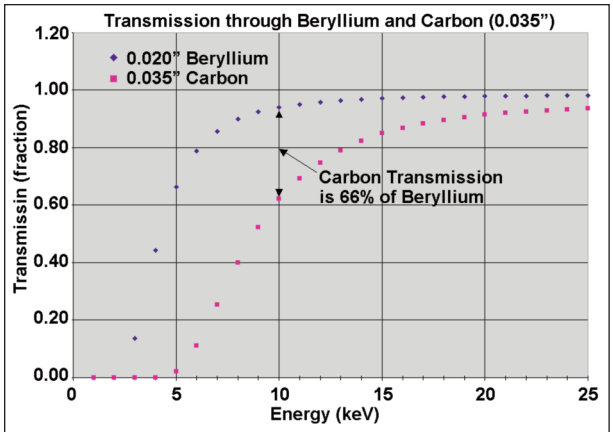

Fig. 6. Transmission through Be and Carbon.

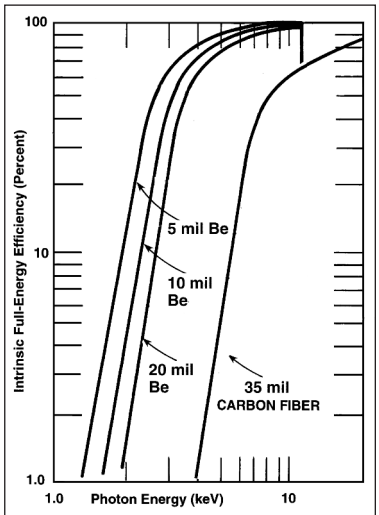

Fig. 7. Low Energy Gamma and X-Ray Transmission of Be and Carbon Fiber Windows.

Defining the Detector Model

• See ordering information for option compatibility.

Base Model (example)	PopTop or Streamline	Endcap Diameter	ICS Option (if required)	Window Option (if required)	Preamplifier Option (if required)	High Voltage Option (if required)
GEM10	P4 (PopTop) (Streamline)	-70 -76 -83 -95 -108	-ICS-E -ICS -ICS-LB	-RB -HE -LB-C -XLB-C	-PL -HJ	-SMP

PopTop Detector Capsule

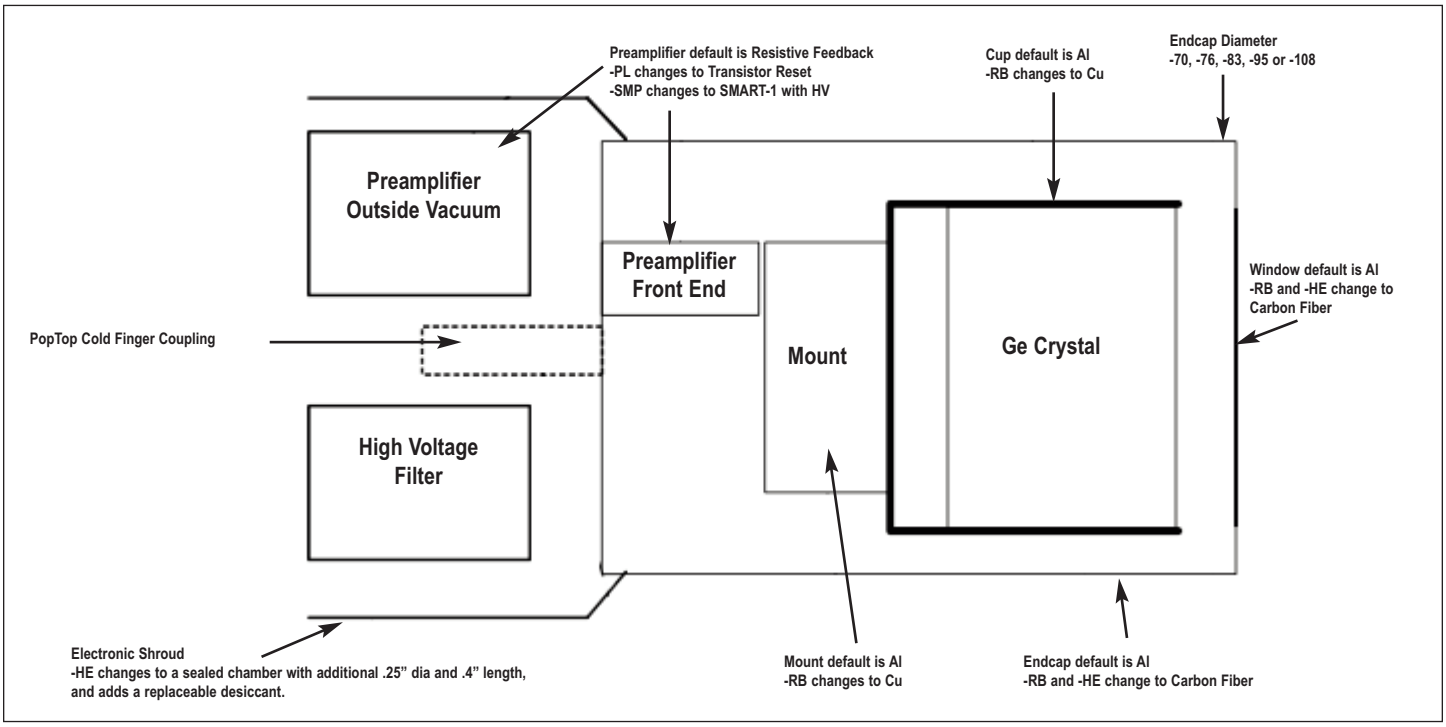

Streamline Detector Capsule

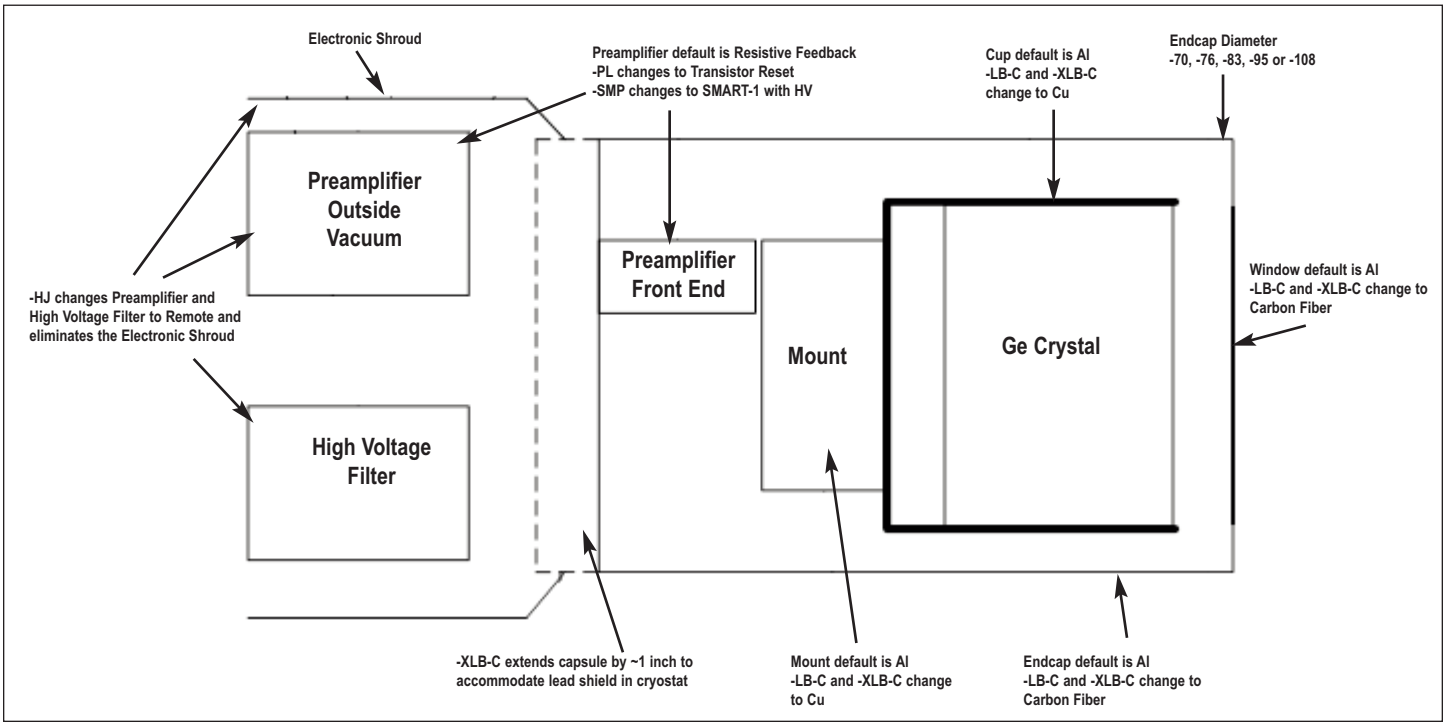

Streamline Detector Capsule for Integrated Cryocooling System with Internal Preamplifier (ICS)

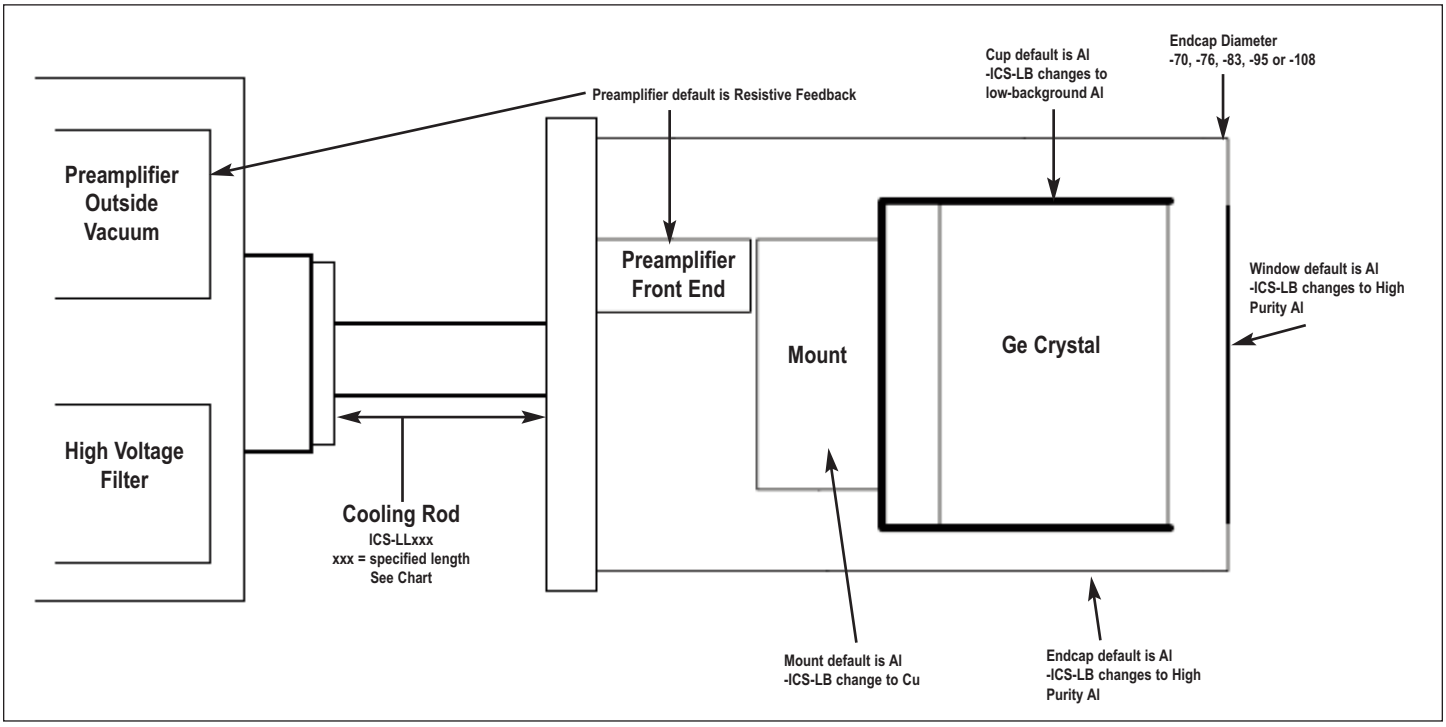

Streamline Detector Capsule for Integrated Cryocooling System with External Preamplifier (ICS-E)

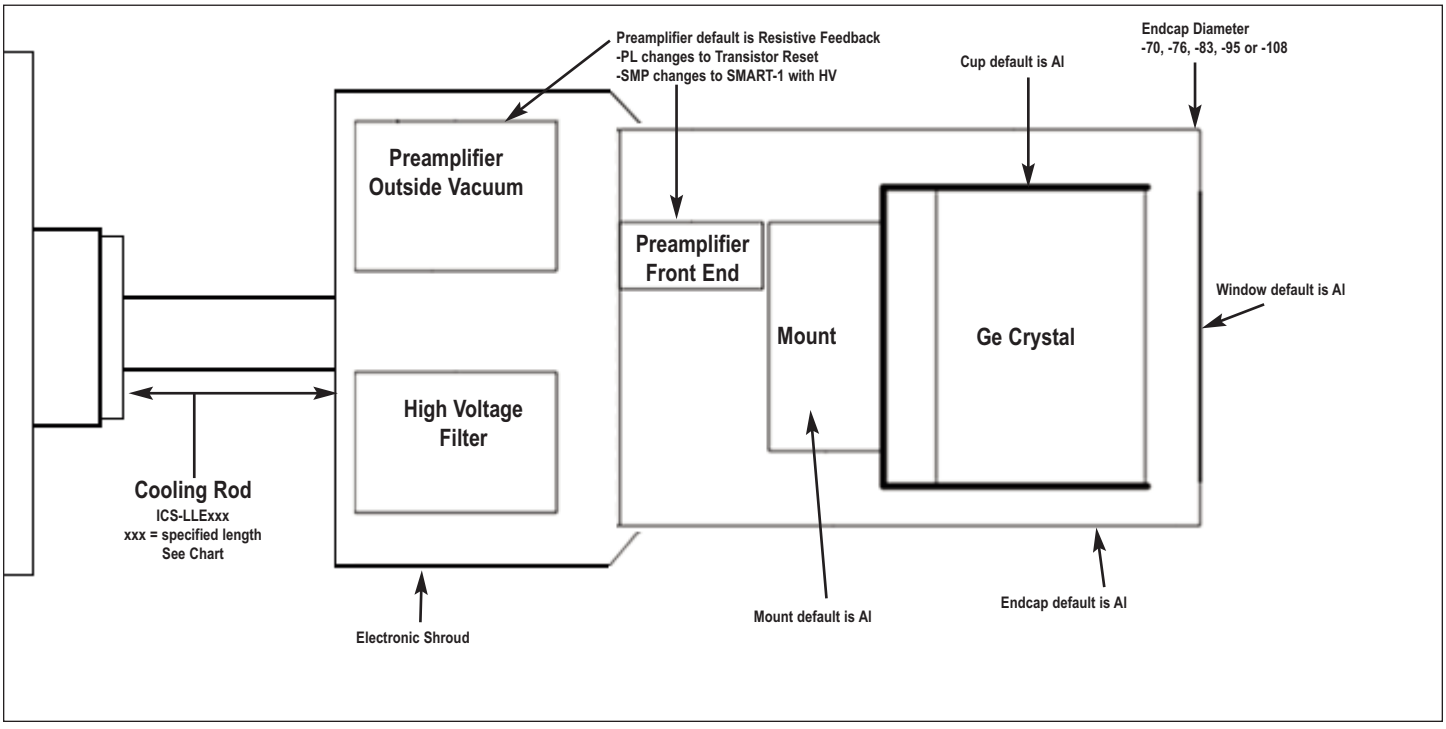

Streamline Cryostat and Cryostat/Dewar Assemblies

Streamline systems (detector capsule and cryostat) share the same vacuum, requiring a cryostat or cryostat/dewar selection with the cryostat having a matching diameter to the capsule endcap.

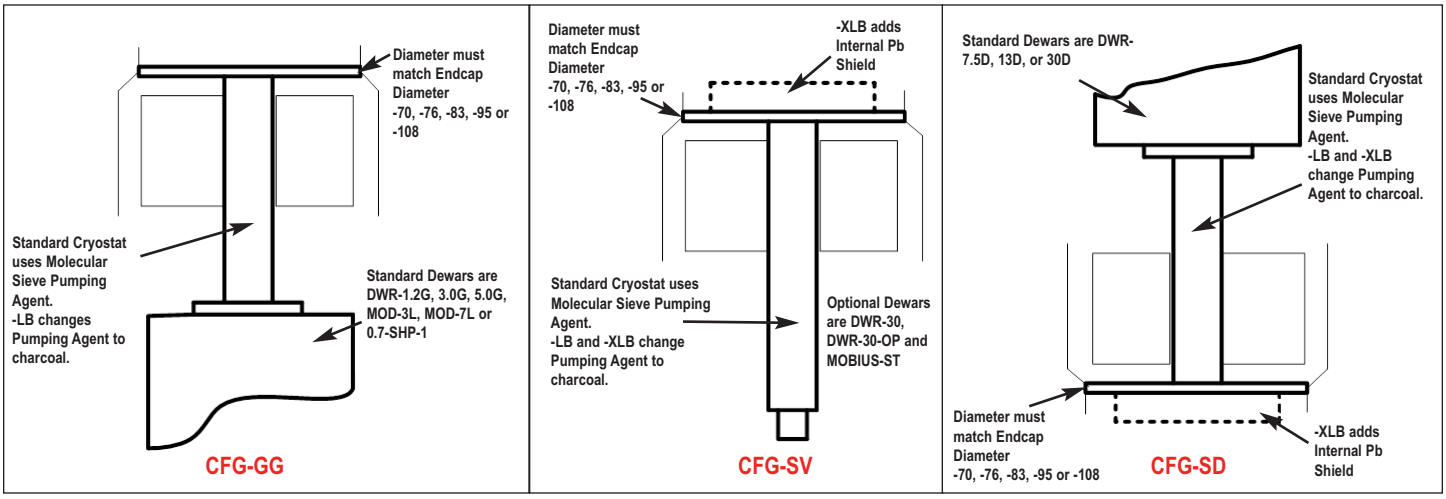

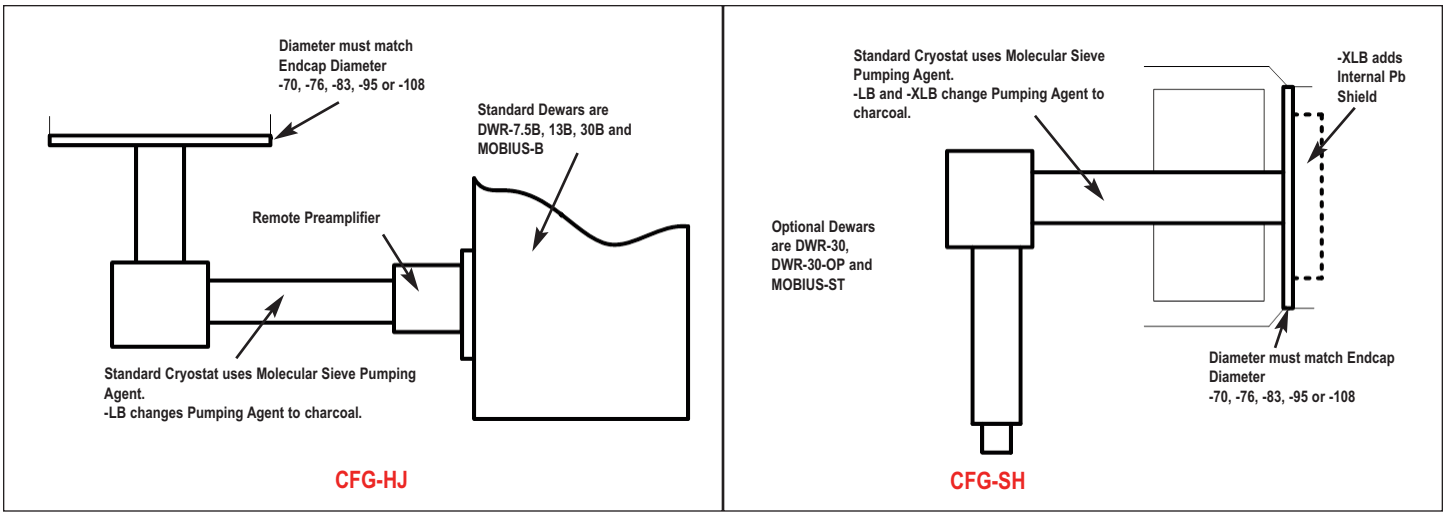

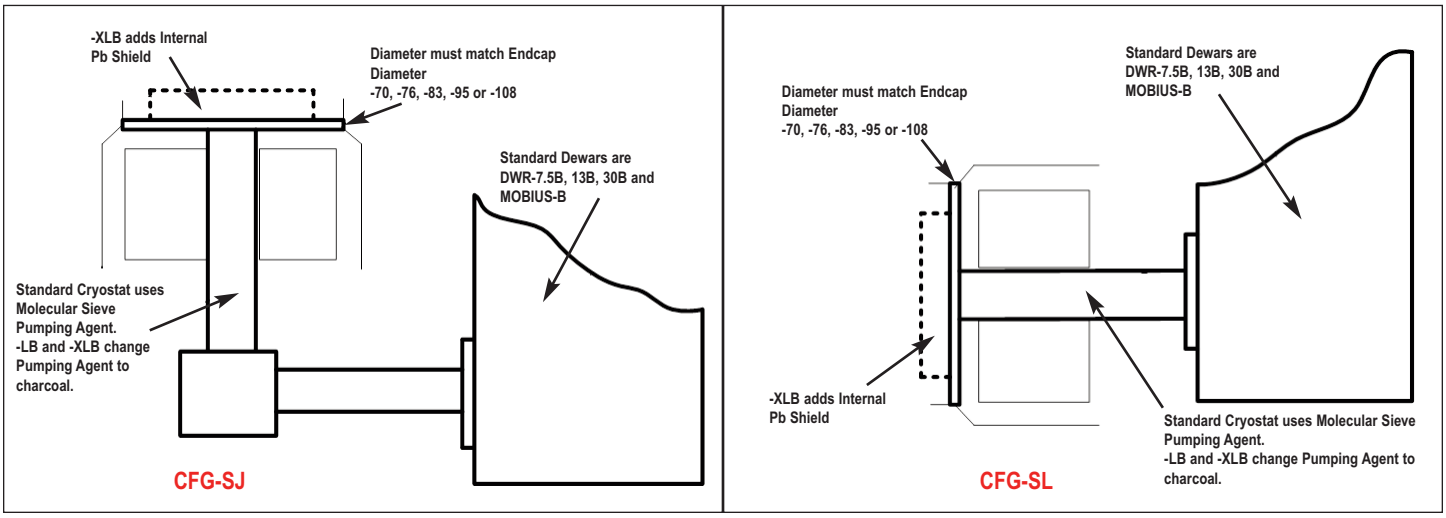

PopTop and Streamline Dimensional Data

Streamline systems (detector capsule and cryostat or ICS) share the same vacuum. A cryostat or ICS must be ordered with a Streamline capsule. The cryostat or cryostat/dewar selection must have a matching diameter to the capsule endcap.

The PopTop capsule features an internal vacuum arrangement. It can be mounted on any of the available PopTop cryostats, cryostat/dewar combinations, or ICS-P4 mechanical cooling systems.

The cryostat and dewar drawings that follow are to be used in conjunction with the accompanying tables of dimensions.

Note: Cryostat/Dewar drawings are NOT to scale, see tables that follow for complete dimensions.
Dimensions are for reference only and subject to change, if dimensional constraints are critical, contact the factory.

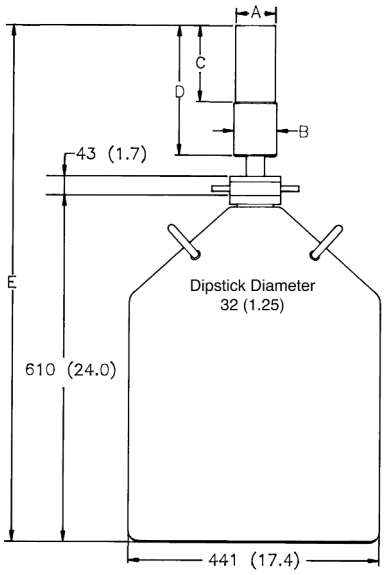

CFG-SV, DWR-30

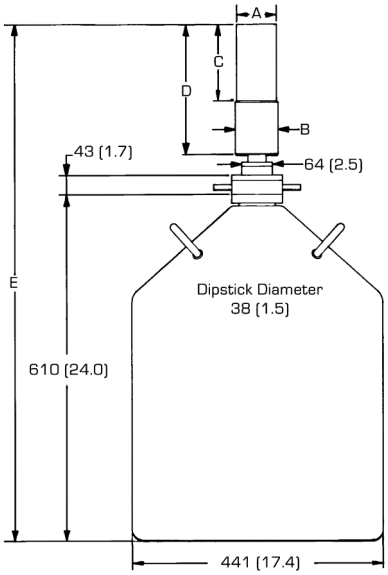

CFG-PV4, DWR-30

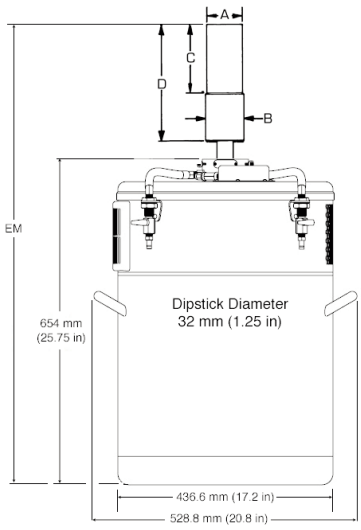

CFG-SV, MOBIUS-ST

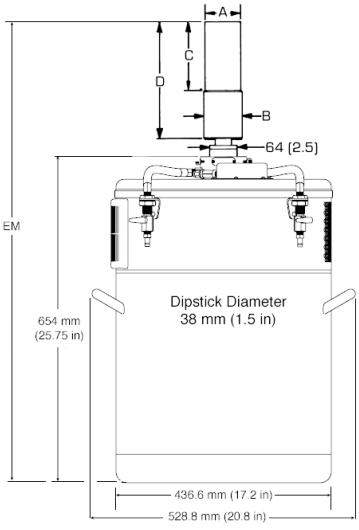

CFG-PV4, MOBIUS-PT

Note: Cryostat/Dewar drawings are NOT to scale, see tables that follow for complete dimensions.
Dimensions are for reference only and subject to change, if dimensional constraints are critical, contact the factory.

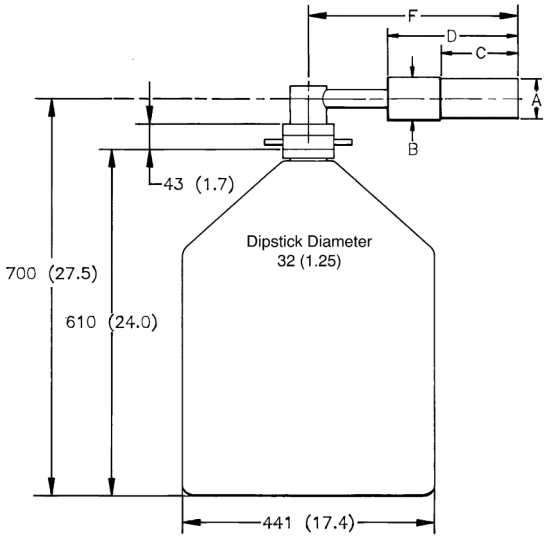

CFG-SH, DWR-30

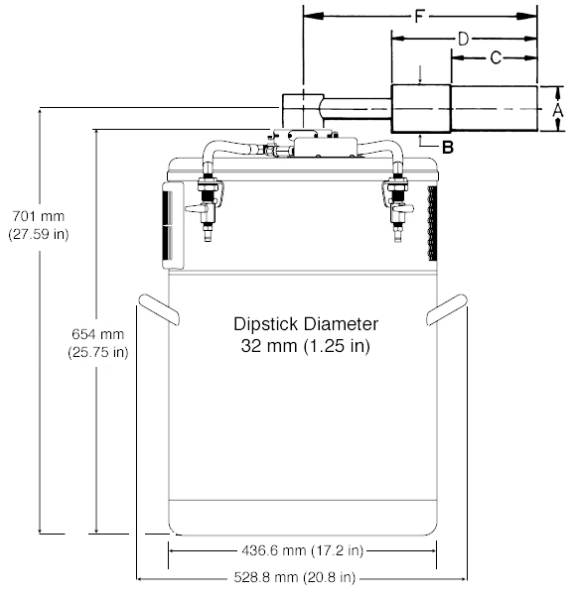

CFG-SH, MOBIUS-ST

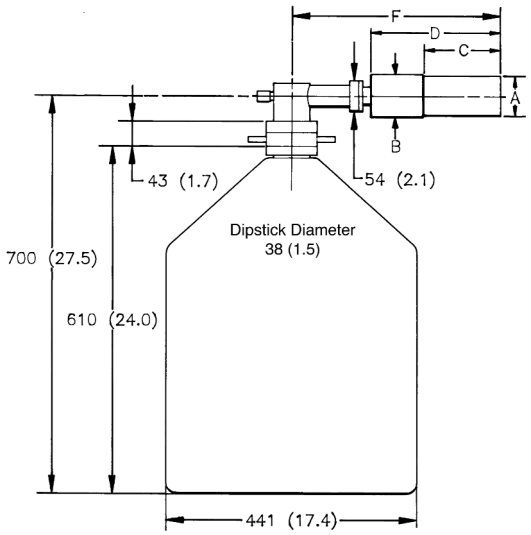

CFG-PH4, DWR-30

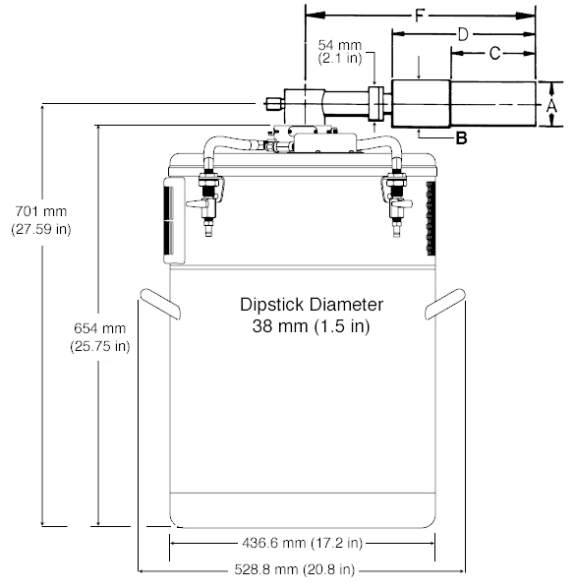

CFG-PH4, MOBIUS-PT

Note: Cryostat/Dewar drawings are NOT to scale, see tables that follow for complete dimensions.
Dimensions are for reference only and subject to change, if dimensional constraints are critical, contact the factory.

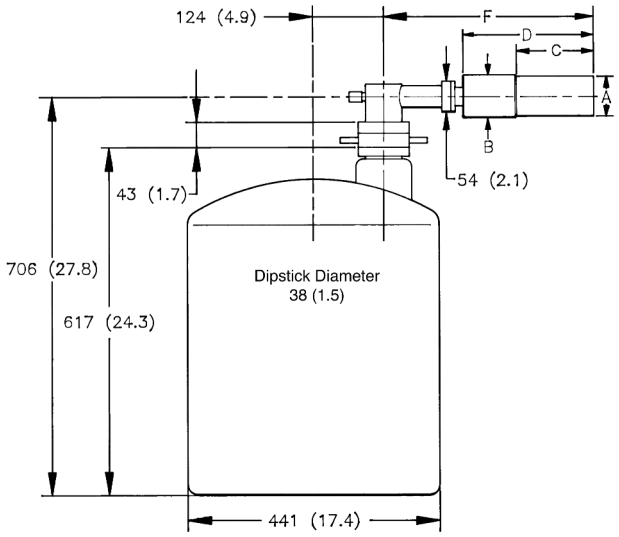

CFG-PH4, DWR-30-OP

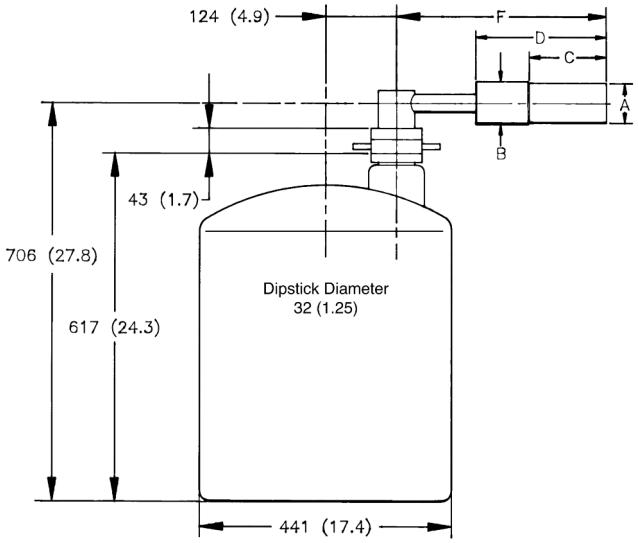

CFG-SH, DWR-30-OP

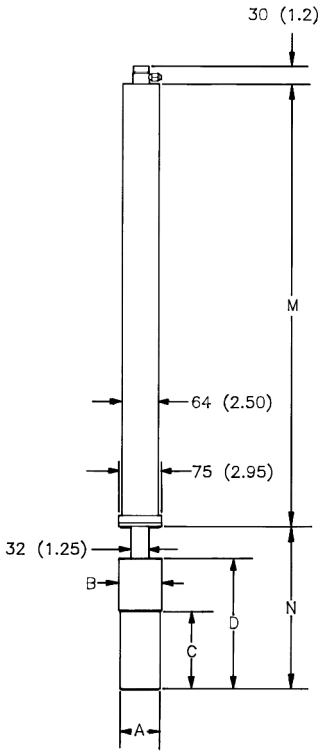

CFG-PSHP4 or
CFG-GG, DWR-0.7-SHP-1

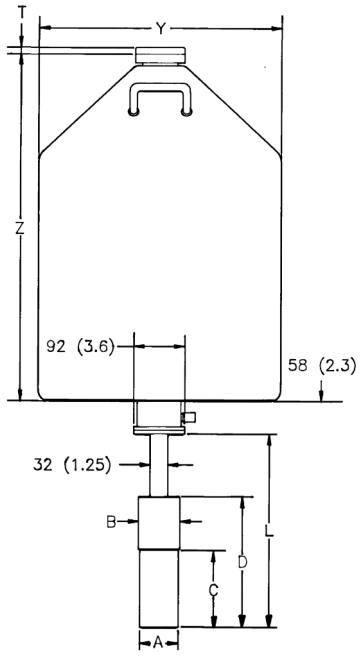

CFG-PD4-30 (or -13 or -7.5) or
CFG-SD, DWR-30D (or -13D or -7.5D)

Note: Cryostat/Dewar drawings are NOT to scale, see tables that follow for complete dimensions.
Dimensions are for reference only and subject to change, if dimensional constraints are critical, contact the factory.

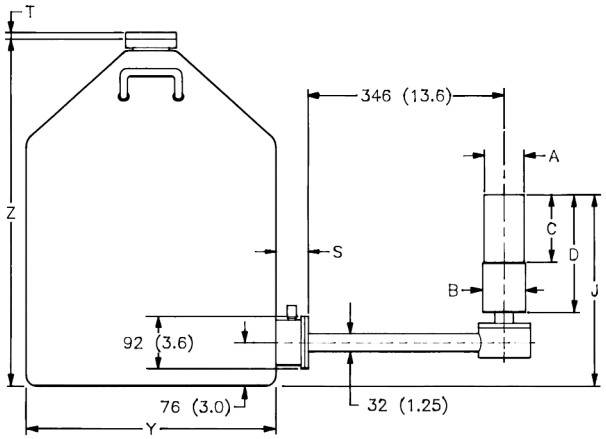

CFG-SJ, DWR-30B (or -13B or -7.5B)

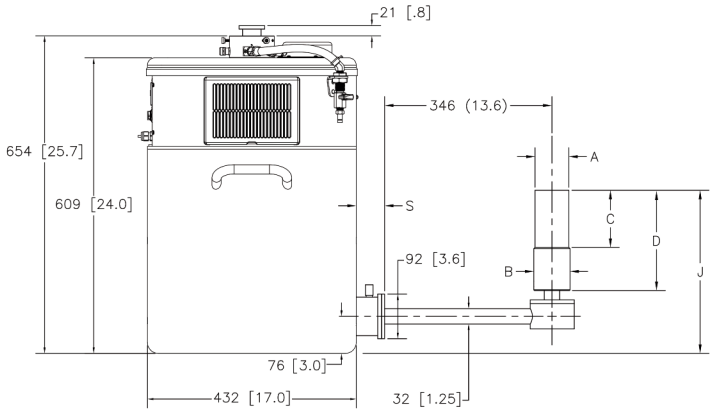

CFG-SJ, MOBIUS-B

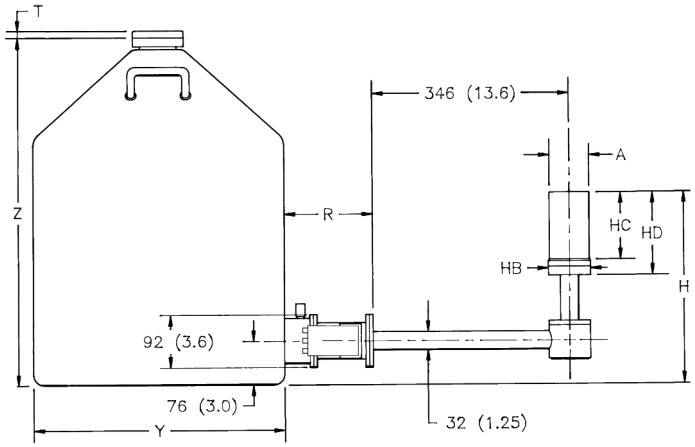

CFG-HJ, DWR-30B (or -13B or -7.5B)

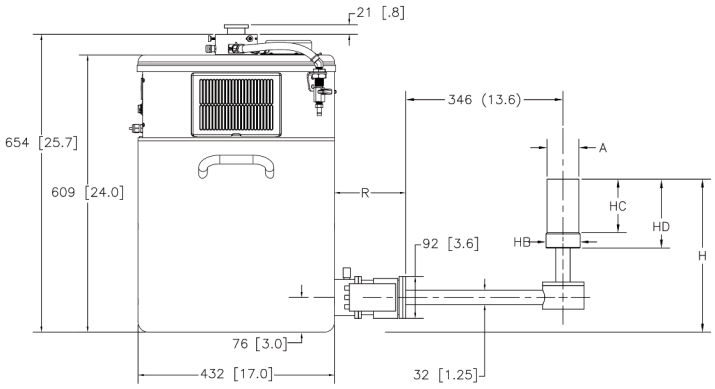

CFG-HJ, MOBIUS-B

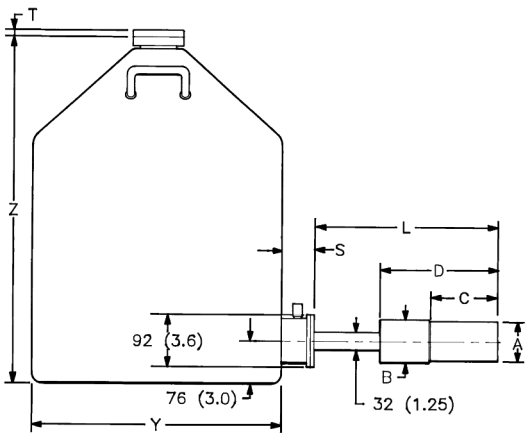

CFG-PS4-30 (or -13 or -7.5) or
CFG-SL, DWR-30B (or -13B or -7.5B)

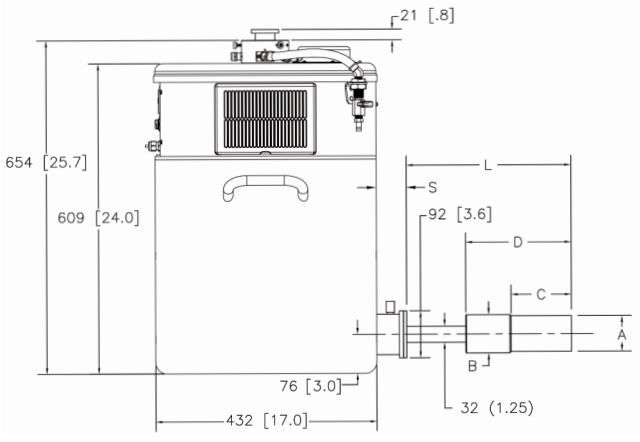

CFG-PS4-MOBIUS-B or CFG-SL, MOBIUS-B

Note: Cryostat/Dewar drawings are NOT to scale, see tables that follow for complete dimensions.
Dimensions are for reference only and subject to change, if dimensional constraints are critical, contact the factory.

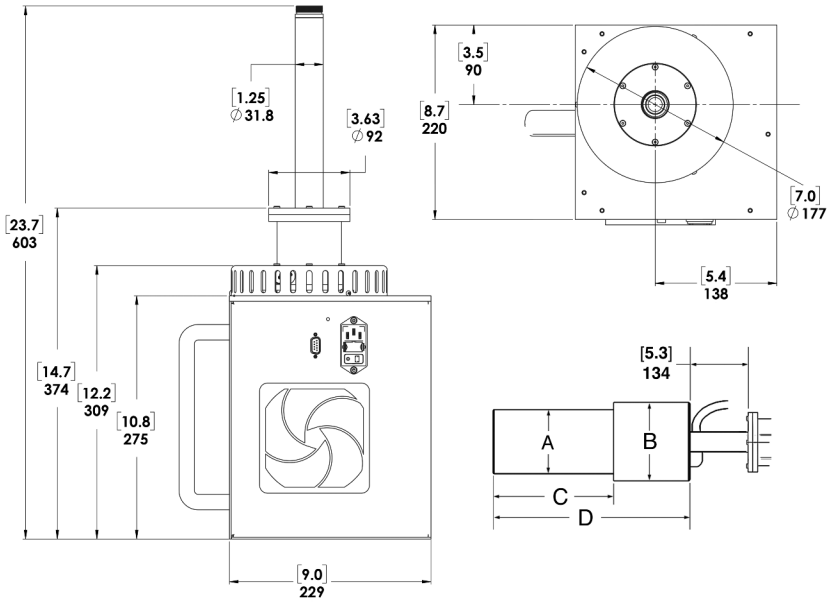

CFG-ICS-P4

PopTop GEM Detector Dimensions

- Dimensions are for reference only and subject to change.
- If dimensional constraints are critical, contact the factory.

Endcap Model (dia. mm)			-70	-76	-83	-95	-108
% Efficiencies available in this endcap size			0–35	25–45	25–65	60–110	120–150
Dim.	Unit	Tol.					
A	mm (in)	0.3 (0.01)	70 (2.75)	76 (3.0)	83 (3.25)	95 (3.75)	108 (4.25)
B	mm (in)	0.3 (0.01)	75 (2.95)	88 (3.45)	88 (3.45)	100 (3.95)	113 (4.45)
C	mm (in)	5 (0.2)	134 (5.3)	165 (6.4)	168 (6.6)	193 (7.6)	207 (8.2)
D	mm (in)	8 (0.3)	250 (9.8)	282 (11.2)	282 (11.2)	309 (12.2)	323 (12.7)
E	mm (in)	18 (0.7)	947 (37.3)	982 (38.6)	982 (38.6)	1007 (39.7)	1019 (40.1)
EM	mm (in)	19 (0.75)	948 (37.3)	983 (38.7)	983 (38.7)	1008 (39.7)	1020 (40.1)
F	mm (in)	10 (0.4)	396 (15.6)	429 (16.9)	429 (16.9)	455 (17.9)	469 (18.5)
L	mm (in)	10 (0.4)	338 (13.3)	371 (14.6)	371 (14.6)	396 (15.6)	412 (16.2)
M	mm (in)	8 (0.3)	790 (31.1)	X X	X X	X X	X X
N	mm (in)	10 (0.4)	278 (10.9)	312 (12.3)	312 (12.3)	338 (13.3)	348 (13.7)

Streamline GEM Detector Dimensions

- Dimensions are for reference only and subject to change.
- If dimensional constraints are critical, contact the factory.

			Standard or LB					XLB				
Endcap Model (dia. mm)			-70	-76	-83	-95	-108	-70	-76	-83	-95	-108
% Efficiencies available in this endcap size			0–35	25–45	25–65	60–110	120-150	0–35	25–45	25–65	60–110	120-150
Dim.	Unit	Tol.										
A	mm (in)	0.3 (0.01)	70 (2.75)	76 (3.0)	83 (3.25)	95 (3.75)	108 (4.25)	70 (2.75)	76 (3.0)	83 (3.25)	95 (3.75)	108 (4.25)
B	mm (in)	0.3 (0.01)	75 (2.95)	88 (3.45)	88 (3.45)	100 (3.95)	113 (4.45)	75 (2.95)	88 (3.45)	88 (3.45)	100 (3.95)	113 (4.45)
C	mm (in)	5 (0.2)	134 (5.3)	132 (5.2)	134 (5.3)	160 (6.3)	197 (7.8)	160 (6.3)	157 (6.1)	160 (6.3)	185 (7.3)	197 (7.8)
D	mm (in)	8 (0.3)	246 (9.7)	259 (10.2)	259 (10.2)	284 (11.2)	322 (12.7)	272 (10.7)	284 (11.2)	284 (11.2)	310 (12.2)	322 (12.7)
E	mm (in)	18 (0.7)	916 (36.1)	932 (36.7)	932 (36.7)	957 (37.7)	995 (39.2)	941 (37.1)	958 (37.7)	958 (37.7)	983 (38.7)	995 (39.2)
EM	mm (in)	19 (0.75)	917 (36.1)	933 (36.7)	933 (36.7)	958 (37.7)	996 (39.2)	942 (37.1)	959 (37.8)	959 (37.8)	984 (38.7)	996 (39.2)
F	mm (in)	10 (0.4)	368 (14.5)	381 (15.0)	381 (15.0)	406 (16.0)	445 (17.5)	394 (15.5)	406 (16.0)	406 (16.0)	432 (17.0)	445 (17.5)
H	mm (in)	18 (0.7)	351 (13.8)	364 (14.3)	364 (14.3)	390 (15.3)	428 (16.9)	X X	X X	X X	X X	X X
HB	mm (in)	0.3 (0.1)	73 (2.9)	85 (3.4)	85 (3.4)	98 (3.9)	111 (4.4)	X X	X X	X X	X X	X X
HC	mm (in)	5 (0.2)	134 (5.3)	132 (5.2)	135 (5.3)	160 (6.3)	199 (7.8)	X X	X X	X X	X X	X X
HD	mm (in)	10 (0.4)	162 (6.4)	175 (6.9)	175 (6.9)	200 (7.9)	238 (9.4)	X X	X X	X X	X X	X X
J	mm (in)	10 (0.4)	380 (15)	393 (15.5)	393 (15.5)	418 (16.5)	456 (18)	405 (16)	418 (16.5)	418 (16.5)	444 (17.5)	456 (18)
L	mm (in)	10 (0.4)	338 (13.3)	351 (13.8)	351 (13.8)	376 (14.8)	414 (16.3)	363 (14.3)	376 (14.8)	376 (14.8)	401 (15.8)	414 (16.3)
M	mm (in)	8 (0.3)	516 (20.3)	X X	X X	X X	X X	516 (20.3)	X X	X X	X X	X X
N	mm (in)	10 (0.4)	278 (11)	292 (11.5)	292 (11.5)	318 (12.5)	355 (14)	305 (12)	318 (12.5)	318 (12.5)	243 (13.5)	355 (14)

Note: Cryostat/Dewar drawings are NOT to scale, see tables that follow for complete dimensions.
Dimensions are for reference only and subject to change, if dimensional constraints are critical, contact the factory.

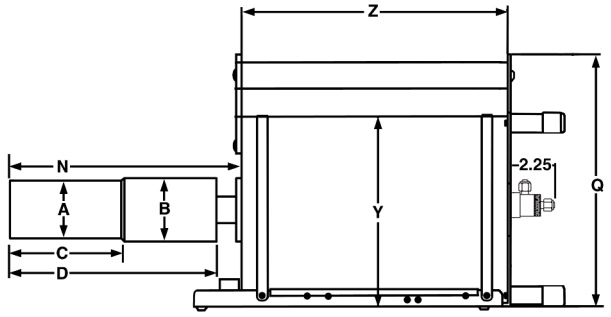

CFG-PG4-1.2 (or -3 or -5) or
CFG-GG, DWR-1.2G (or -3.0G, -5.0G)

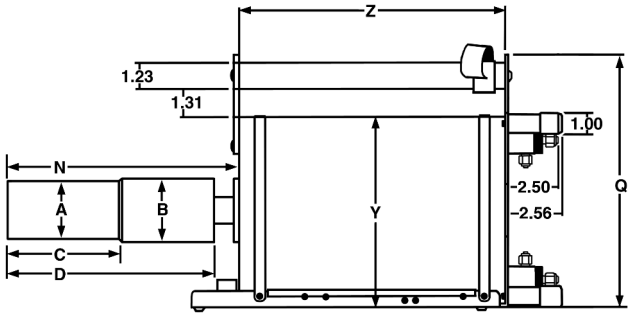

CFG-PMOD4-3 (or -7) or
CFG-GG, DWR-MOD3L (or -MOD7L)

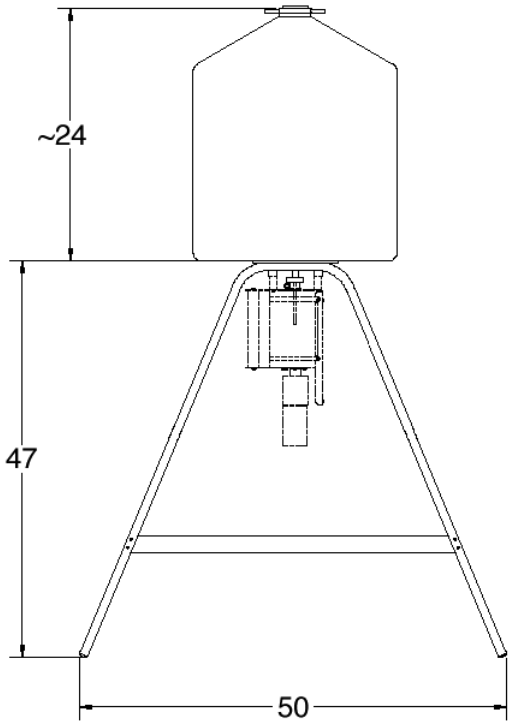

DWR-S/F

Gamma Gage and Side-Looking Dewar Dimensions

- Dimensions are for reference only and subject to change.
- If dimensional constraints are critical, contact the factory.

			Cryostat/Dewar or Dewar Type							
			CFG-PG4 and DWR-x.xG			CFG-PMOD4 and DWR-MOD-xL		CFG-PS4, CFG-PD4, DWR-xxB and DWR-xxD		
			VOLUME			VOLUME		VOLUME		
Dim.	UNIT	TOL. ±	1.2L	3L	5L	3L	7L	7.5L	13L	30L
Q	mm (in)	13 (0.5)	229 (9.0)	302 (11.9)	302 (11.9)	229 (9.0)	302 (11.9)	X X	X X	X X
R	mm (in)	10 (0.4)	X X	X X	X X	X X	X X	174 (6.9)	174 (6.9)	155 (6.1)
S	mm (in)	7.6 (0.3)	X X	X X	X X	X X	X X	77 (3.0)	77 (3.0)	60 (2.3)
T	mm (in)	5 (0.2)	X X	X X	X X	X X	X X	10 (0.4)	10 (0.4)	13 (0.5)
Y	mm (in)	13 (0.5)	157 (6.2)	229 (9.0)	229 (9.0)	157 (6.2)	229 (9.0)	224 (8.8)	307 (12.1)	442 (17.4)
Z	mm (in)	5 (0.2)	229 (9.0)	267 (10.5)	419 (16.5)	292 (11.5)	320 (12.6)	452 (17.8)	429 (16.9)	610 (24.0)

Note: Cryostat/Dewar drawings are NOT to scale, see tables that follow for complete dimensions.
Dimensions are for reference only and subject to change, if dimensional constraints are critical, contact the factory.

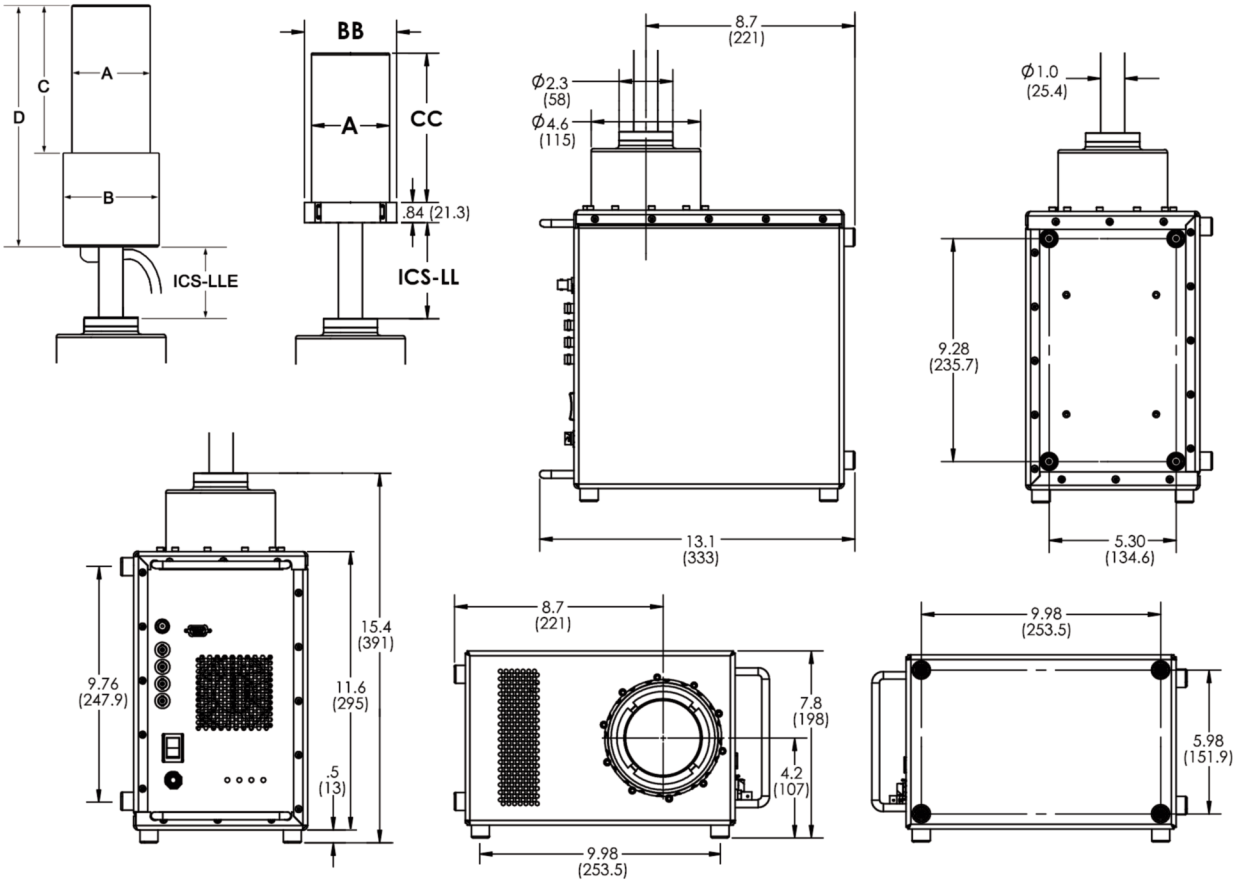

CFG-ICS or CFG-ICS-E

Streamline GEM Detector Dimensions for ICS Integrated Cryocooling System

- Dimensions are for reference only and subject to change.
- If dimensional constraints are critical, contact the factory.

Endcap Model (dia. mm)			-70	-76	-83	-95	-108
% Efficiencies available in this endcap size			0–35	25–45	25–65	60–110	120–150
Dim.	Unit	Tol.					
A	mm (in)	0.3 (0.01)	70 (2.75)	76 (3.0)	83 (3.25)	95 (3.75)	108 (4.25)
B	mm (in)	0.3 (0.01)	101 (4.0)	101 (4.0)	101 (4.0)	114 (4.5)	127 (5.0)
BB	mm (in)	0.3 (0.01)	85 (3.4)	92 (3.6)	98 (3.9)	111 (4.4)	124 (4.9)
C	mm (in)	5 (0.2)	144 (5.7)	157 (6.2)	157 (6.2)	182 (7.2)	182 (7.2)
CC	mm (in)	5 (0.2)	145 (5.7)	158 (6.2)	158 (6.2)	183 (7.2)	183 (7.2)
D	mm (in)	5 (0.2)	243 (9.6)	256 (10.1)	256 (10.1)	281 (11.1)	281 (11.1)
ICS-LL	mm	3	Specify length. Choose from 051, 064, 076, 089, 102, 114, 127, 140,152, 165, 178, 191, 203, 216, 229, 241, 254, 267, 279, 292, or 305				
ICS-LLE	mm	3	Specify length. Choose from 025, 031, 037, 050, 063, 075, 088, 101, 114, 126, 139, 152, 164, 177, 190, 202, 215, or 228				

GEM Endcap Diameter and Window

Note that there is an “overlap” of coaxial detector efficiency versus endcap diameter. For example, a 25–35% efficiency detector, depending on diameter, may fit in either a -70, -76 or -83 size endcap. The endcap size must be specified by adding the endcap Model (-xx) to the Detector Model (e.g., GEM25-76 or GEM25P4-70).

If this, or any other dimension is critical, please specify at time of order.

Endcap Model (dia. mm)	**-70**	**-76**	**-83**	**-95**	**-108**
Endcap Diameter (in)	2.75	3.00	3.25	3.75	4.25
Efficiency	0–35%	25–45%	25–65%	60–110%	120–150%
Thickness of Al Window	1 mm	1 mm	1 mm	1.5 mm	1.5 mm
Thickness of CF Window	.9 mm nominal	.9 mm nominal	.9 mm nominal	.9 mm nominal	.9 mm nominal

Example Model Numbers

PopTop Configuration

GEM10P4-70	10% efficiency GEM detector with 70-mm diameter endcap.
CFG-PH4	Horizontal Dipstick type cryostat.
MOBIUS-PT	Möbius Recycler.
GEM35P4-76-SMP	35% efficiency GEM detector with 76-mm diameter endcap and SMART-1 preamplifier and high voltage supply.
CFG-PD4-7.5	Downlooking cryostat with 7.5 liter dewar.
GEM50-83-HE	50% efficiency GEM detector with 83-mm diameter carbon fiber endcap with sealed preamplifier and high voltage filter.
CFG-PG4-3	Portable Gamma Gage cryostat with 3 liter all-position dewar.
GEM50P4-83-RB-SMP	50% efficiency GEM detector with 83-mm diameter reduced background carbon fiber endcap and SMART-1 preamplifier and high voltage supply.
CFG-PV4	Vertical “dipstick” style cryostat.
DWR-30	30 liter top port dewar that accepts “dipstick” style cryostats.
GEM75P4-95	75% efficiency GEM detector with 95-mm diameter endcap.
CFG-ICS-P4	Integrated Cryocooling System

Streamline Configuration

GEM10-70	10% efficiency GEM detector with 70-mm diameter endcap.
CFG-GG-70	Portable Gamma Gage cryostat with matching 70-mm diameter flange.
DWR-1.2G	1.2 liter all-position dewar for Gamma Gage cryostat.
GEM35-76-SMP	35% efficiency GEM detector with 76-mm diameter endcap and SMART-1 preamplifier and high voltage supply.
CFG-SD-76	Down-looking cryostat with matching 76-mm diameter flange.
DWR-7.5D	7.5 liter down-looking dewar.
GEM50-83-HJ	50% efficiency GEM detector with 83-mm diameter endcap and remote preamplifier and high voltage filter.
CFG-HJ-83	“J” configuration cryostat with matching 83-mm diameter flange, and remote fittings for the preamplifier and high voltage filter.
DWR-30B	30 liter side-looking dewar for “HJ” cryostat.

Streamline with Integrated Cryocooling System (ICS) Configuration

GEM10-70-ICS	10% efficiency GEM detector with 70-mm diameter endcap in an ICS integrated cryocooling system with internal preamp.
CFG-ICS	Integrated Cryocooling System with internal preamp.
ICS-LL102-70	102-mm cooling rod length with matching 70-mm diameter flange.
GEM35-76-ICS-E-SMP	35% efficiency GEM detector with 76-mm diameter endcap in an ICS integrated cryocooling system with external preamp, SMART-1 preamplifier and high voltage supply.
CFG-ICS-E	Integrated Cryocooling System with external preamp.
ICS-LLE063-76	63-mm cooling rod length with matching 76-mm diameter flange.
GEM90-95-ICS-LB	90% efficiency GEM detector with 95-mm diameter endcap in an ICS integrated cryocooling low-background system with internal preamp, low-background high purity aluminum endcap and OFHC Cu mount.
CFG-ICS	Integrated Cryocooling System with internal preamp.
ICS-LL089-95	89-mm cooling rod length with matching 95-mm diameter flange.

Ordering Information

- For Streamline, remove the "P4" from the model number.
- Endcap Diameter must be specified, see Endcap Diameter.
- FWHM = Full Width at Half Maximum; FW.1M = Full Width at One-Tenth Maximum; FW.02M = Full Width at One-Fiftieth Maximum; total system resolution for a source at 1000 counts/s measured in accordance with ANSI/IEEE Std. 325-1996, using ORTEC standard electronics. The FW.02M/FWHM specification is typical, not warranted.
- If dimensional considerations are critical, contact factory.
- Cryostat and dewar or other cooling device are not included with detector and are required for operation.
- A cryostat must be ordered with a Streamline detector.
- Monte Carlo drawing included.

		Resolution			Peak Shape		
Model No.	Efficiency (%)	@122 keV (keV)	@1.33 MeV (keV)	Peak-to-Compton Ratio	FW.1M/ FWHM	FW.02M/ FWHM typical	Endcap Diameter (mm)
GEM10P4	10	0.80	1.75	41:1	1.9	2.6	-70
GEM15P4	15	0.82	1.80	46:1	1.9	2.6	-70
GEM20P4	20	0.82	1.80	52:1	1.9	2.6	-70
GEM25P4	25	0.82	1.85	56:1	1.9	2.6	-70, -76, -83
GEM30P4	30	0.85	1.85	60:1	1.9	2.6	-70, -76, -83
GEM35P4	35	0.85	1.85	62:1	1.9	2.6	-70, -76, -83
GEM40P4	40	0.87	1.85	64:1	1.9	2.6	-76, -83
GEM45P4	45	0.90	1.90	64:1	1.9	2.6	-76, -83
GEM50P4	50	0.90	1.90	66:1	1.9	2.6	-83
GEM55P4	55	1.00	1.90	67:1	1.9	2.8	-83
GEM60P4	60	1.00	1.95	70:1	1.9	3.0	-83, -95
GEM65P4	65	1.00	1.95	73:1	1.9	3.0	-83, -95
GEM70P4	70	1.00	2.0	75:1	2.0	3.0	-95
GEM75P4	75	1.10	2.0	77:1	2.0	3.0	-95
GEM80P4	80	1.10	2.0	77:1	2.0	3.0	-95
GEM90P4	90	1.20	2.0	80:1	2.0	3.0	-95
GEM100P4	100	1.20	2.1	83:1	2.0	3.0	-95
GEM110P4	110	1.30	2.1	85:1	2.0	3.0	-95
GEM120P4	120	1.30	2.1	86:1	2.0	3.1	-108
GEM130P4	130	1.30	2.1	90:1	2.0	3.1	-108
GEM140P4	140	1.30	2.2	90:1	2.0	3.1	-108
GEM150P4	150	1.30	2.3	90:1	2.0	3.1	-108

GEM Detector Options

- Append model to detector model number.
- Consult factory for low-background ICS with external preamp.

Model No.	Description
-RB	PopTop Only. Reduced background PopTop capsule with Carbon Fiber endcap, add "-RB" to the model number.
-HE	PopTop Only. Harsh Environment PopTop capsule for detectors 76 mm and larger, add "-HE" to the model number.
-PL	PLUS Ultra-high-count-rate Preamplifier, add "-PL" to the model number. Not compatible with -HJ or -ICS options.
-SMP	SMART-1 detector option for positive bias detector, add "-SMP" to the model number. Not compatible with -HJ or -ICS options.
-LB-C	Streamline Only. Low-Background Detector with Carbon Fiber Endcap, add "-LB-C" to the model number. Requires selection of a Low-Background LB cryostat.
-XLB-C	Streamline Only. Extra-Low-Background Detector with Carbon Fiber Endcap, add "-XLB-C" to the model number. Requires selection of a Low-Background XLB cryostat.
-HJ	Streamline Only. Remote preamplifier and high voltage filter for use with HJ type cryostat, add "-HJ" to the model number. Requires selection of HJ cryostat. Not compatible with -PL or -SMP options.
-ICS-E	Streamline Only. Integrated Cryocooling System with external preamp. Cryostat sealed with a cryocooler and immune to thermal short cycling, add "-ICS-E" to the model number. Requires selection of an ICS-E cryostat.
-ICS	Streamline Only. Integrated Cryocooling System with Internal Preamp. Cryostat sealed with a cryocooler and immune to thermal short cycling, add "-ICS" to the model number. Requires selection of an ICS cryostat. Not compatible with -PL or -SMP options.
-ICS-LB	Streamline Only. Integrated Cryocooling Low-Background System with Internal Preamp, High Purity Al Endcap and Cu Mount, add "-ICS-LB" to the model number. Requires selection of an ICS cryostat. Not compatible with -PL or -SMP options.

GEM PopTop Cryostats and Dewars

Model No.	Description
CFG-MG4-1.2G	Gamma Gage Cryostat with 1.2-liter Dewar, Pistol Grip handle and mounting holes to fit the M-1-T1 Tripod (for 83 mm or smaller endcaps)
CFG-PD4-7.5	Down-looking Cryostat with 7.5-liter Dewar
CFG-PD4-13	Down-looking Cryostat with 13-liter Dewar
CFG-PD4-30	Down-looking Cryostat with 30-liter Dewar
CFG-PG4-1.2	Gamma Gage Cryostat with 1.2-liter Dewar (for 83 mm or smaller endcaps) (not compatible with -HE option)
CFG-PG4-3	Gamma Gage Cryostat with 3-liter Dewar
CFG-PG4-5	Gamma Gage Cryostat with 5-liter Dewar
CFG-PH4	Horizontal Cryostat (Dipstick type). Choose DWR-30, DWR-30-OP, MOBIUS-PT or MOBIUS-PT-DET.
CFG-PMOD4-3	Gamma Gage Cryostat with 3-liter Multi-Orientation Dewar
CFG-PMOD4-7	Gamma Gage Cryostat with 7-liter Multi-Orientation Dewar
CFG-PS4-7.5	Side-Looking Cryostat with 7.5-liter Dewar
CFG-PS4-13	Side-Looking Cryostat with 13-liter Dewar
CFG-PS4-30	Side-Looking Cryostat with 30-liter Dewar
CFG-PS4-MOBIUS-B	Side-Looking Cryostat with Möbius Recycler 28-liter Dewar
CFG-PS4-MOBIUS-B-DET	Side-Looking Cryostat with Möbius Recycler 28-liter Dewar for purchase in combination with any PopTop detector.
CFG-PSHP4	Down-Looking Shallow-Hole Probe with 0.7-liter Dewar
CFG-PV4	Vertical Cryostat (Dipstick type). Choose DWR-30, DWR-30-OP, MOBIUS-PT or MOBIUS-PT-DET.
CFG-ICS-P4	Integrated Cryocooling System
MOBIUS-PT	Möbius Recycler.
MOBIUS-PT-DET	Möbius Recycler Dewar for purchase in combination with any PopTop detector and vertical or horizontal dipstick cryostat.
DWR-30	30-liter Dewar. Includes collar for 1.5" diameter cryostat.
DWR-30-OP	30-liter Offset-Port Dewar. Includes collar for 1.5" diameter cryostat.
DWR-S/F	Storage Fill Dewar for CFG-PG4-X

GEM Streamline Cryostats

- May only be purchased with a detector.
- Append matching Detector Endcap Size designation to cryostat model: -70, -76, -83, -95, -108 [e.g., CFG-SJ-95 for GEM75-95, or CFG-SL-XLB-76 for GEM25-76-XLB-C]
- Dewar required. Select dewar from GEM Streamline Dewars.
- Horizontal and Vertical Cryostats include CFG-ADAPTOR to increase cryostat diameter from 1.25 inch to 1.5 inch for use with DWR-30 and DWR-30-OP.

Model No.	Description
CFG-GG	Gamma Gage Cryostat
CFG-HJ	J-type Cryostat with Remote Preamp. (for -HJ option only)
CFG-SD	Down-Looking Cryostat
CFG-SH	Horizontal Cryostat (Dipstick type).
CFG-SJ	J-type Cryostat
CFG-SL	Side-Looking Cryostat
CFG-SV	Vertical Cryostat (Dipstick type).
LOW-BACKGROUND	
CFG-GG-LB	Low-Background Gamma Gage Cryostat
CFG-HJ-LB	Low-Background J-type Cryostat with Remote Preamp. (for -HJ option only)
CFG-SD-LB	Low-Background Down-Looking Cryostat
CFG-SH-LB	Low-Background Horizontal Cryostat (Dipstick type).
CFG-SJ-LB	Low-Background J-type Cryostat
CFG-SL-LB	Low-Background Side-Looking Cryostat
CFG-SV-LB	Low-Background Vertical Cryostat (Dipstick type).
CFG-SD-XLB	Extra-Low-Background Down-Looking Cryostat
CFG-SH-XLB	Extra-Low-Background Horizontal Cryostat (Dipstick type).
CFG-SJ-XLB	Extra-Low-Background J-type Cryostat
CFG-SL-XLB	Extra-Low-Background Side-Looking Cryostat
CFG-SV-XLB	Extra-Low-Background Vertical Cryostat (Dipstick type).

GEM ICS Cryostat

- May only be purchased with a detector.
- Append matching Detector Endcap Size designation to Cooling Rod Length model: -70, -76, -83, -95, -108 [e.g., CFG-ICS, ICS-LL102-70 for GEM25-ICS].

Model	Description
CFG-ICS-E	Integrated Cryocooling System with External Preamp. **Cooling Rod Length must be specified ,see below.** **Cooling Rod Length. Add as separate line item ICS-LLExxx** where xxx = one of the following lengths: 025, 031, 037, 050, 063, 075, 088, 101, 114, 126, 139, 152, 164, 177, 190, 202, 215, or 228 and **append matching Detector Endcap Size** [e.g., ICS-LLE101-70].
CFG-ICS	Integrated Cryocooling System with Internal Preamp. **Cooling Rod Length must be specified ,see below.** **Cooling Rod Length. Add as separate line item ICS-LLxxx** where xxx = one of the following lengths: 051, 064, 076, 089, 102, 114, 127, 140, 152, 165, 178, 191, 203, 216, 229, 241, 254, 267, 279, 292, or 305 and **append matching Detector Endcap Size** [e.g., ICS-LL102-70].

GEM Series Coaxial HPGe Detector
Product Configuration Guide

GEM Streamline Dewars

For Cryostat	Choose	Description
CFG-GG	DWR-1.2G	1.2-liter All-Orientation Dewar
	DWR-3.0G	3.0-liter All-Orientation Dewar
	DWR-5.0G	5.0-liter All-Orientation Dewar
	DWR-MOD-3L	3-liter Multi-Orientation Dewar
	DWR-MOD-7L	7-liter Multi-Orientation Dewar
	DWR-0.7-SHP-G	0.7-liter Shallow-Hole Probe Dewar
	DWR-S/F	Storage/Fill Dewar for DWR-XG
CFG-HJ, SJ, SL	DWR-7.5B	7.5-liter Side-Looking Dewar
	DWR-13B	13-liter Side-Looking Dewar
	DWR-30B	30-liter Side-Looking Dewar
	MOBIUS-B	Möbius Recycler Side-Looking Dewar
CFG-SD	DWR-7.5D	7.5-liter Down-Looking Dewar
	DWR-13D	13-liter Down-Looking Dewar
	DWR-30D	30-liter Down-Looking Dewar
CFG-SV, SH	DWR-30	30-liter Dewar. Includes collar for 1.5" diameter cryostat.
	DWR-30-OP	30-liter Offset-Port Dewar. Includes collar for 1.5" diameter cryostat.
	MOBIUS-ST	Möbius Recycler Dewar for purchase stand alone
	MOBIUS-ST-DET	Möbius Recycler Dewar for purchase in combination with Detector

Specifications subject to change
112122

ORTEC®
www.ortec-online.com
Tel. (865) 482-4411 • Fax (865) 483-0396 • ortec.info@ametek.com
801 South Illinois Ave., Oak Ridge, TN 37830 U.S.A.
For International Office Locations, Visit Our Website
AMETEK®
ADVANCED MEASUREMENT TECHNOLOGY